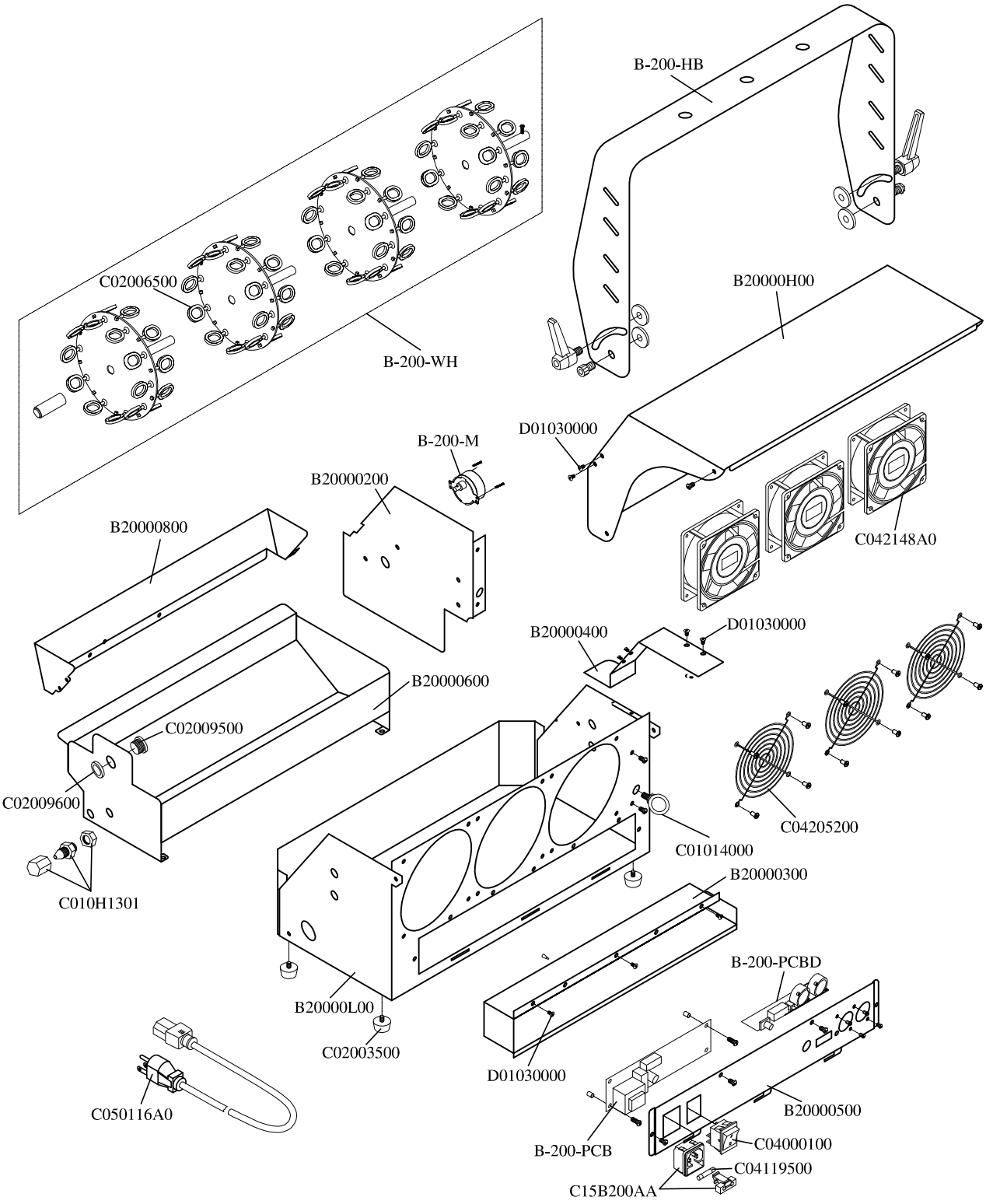

SPARE PARTS OF B-200 (120V)

B20000H00	Steel Case/Cover	C01014000	M8 Screw	C050116A0	Cable & Plug
B20000L00	Steel Case /Base	C010H1300	Nut	C15B200AA	Power Inlet Socket & Fuseholder
B20000200	Motor Plate	C02003500	Foot	D01004000	M3x8L Screw
B20000300	Controller Case Plate	C02006500	Bubble Ring	D01030000	M3x6L Screw
B20000400	Vent	C02009500	Nut	D01101000	M4x8L Screw
B20000500	Controller Case	C02009600	Nut	B-200-HB	Hanging Bracket Set
B20000600	Prough	C04000100	Rocker Switch/Power(Red)	B-200-M	Motor
B20000800	Spout	C04205200	Guardrail	B-200-PCB	Main PC.Board
C01014000	M8 Screw	C04119500	Fuse	B-200-PCBD	IO PC.Board
C010H1301	Nut	C042148A0	Fan	B-200-WH	Bubble Wheel Set
C02003500	Foot				

Antari FOG MACHINE

Antari Lighting And Effects Ltd.

育安照明企業股份有限公司

DwgNo.B200-001 MAY14'10 By VICKY.

HZ-980318 / C04-20090925-01